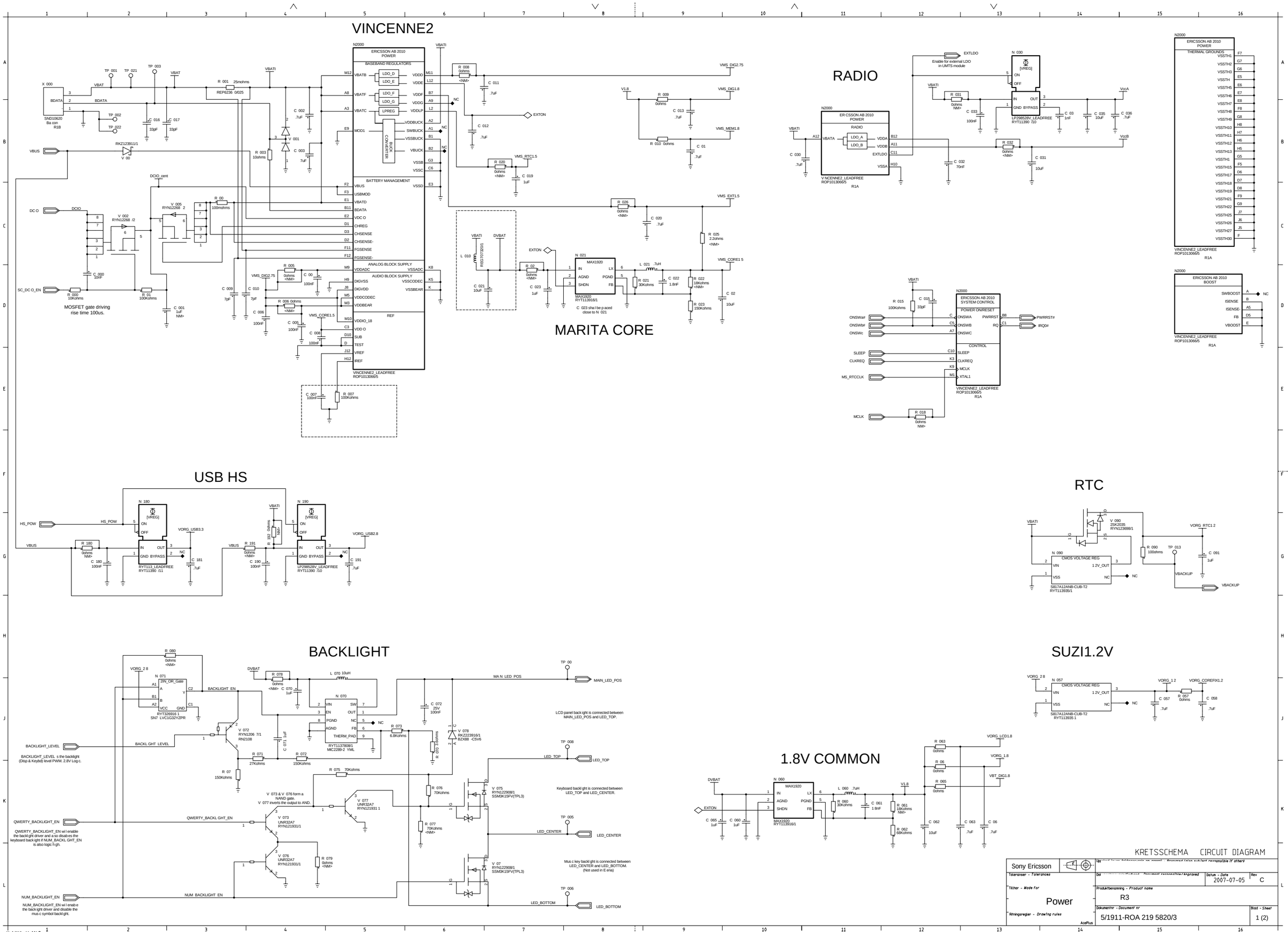
VINCENNE2
RADIO
MARITA CORE
USB HS
RTC
BACKLIGHT
SUZI1.2V
1.8V COMMON
MOSFET gate driving rise time 100us.
KRETSSCHEMA CIRCUIT DIAGRAM
Sony Ericsson
Power
R3
5/1911-ROA 219 5820/3
1 (2)
2007-07-05
C
H=16NA; V=11LD

SUZI CORE

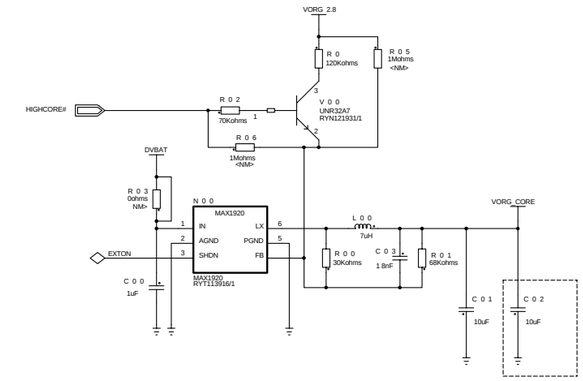

FM RADIO

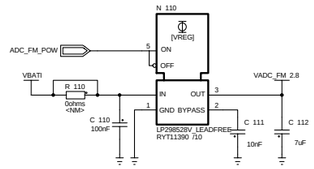

AUDIO DAC

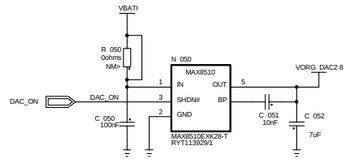

Not mounted for 2.5G versions

WLAN

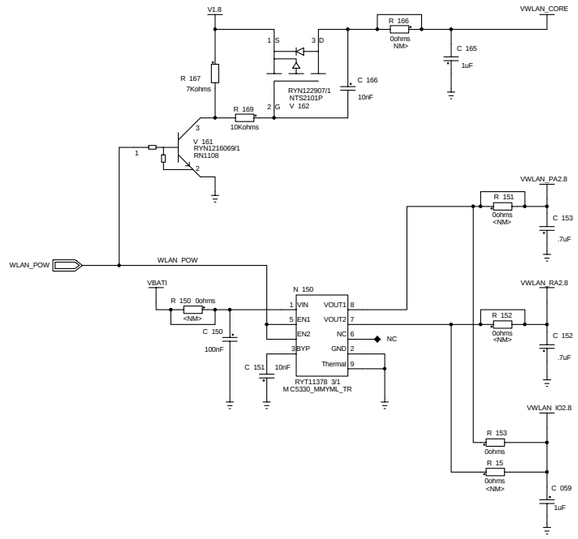

BLUETOOTH

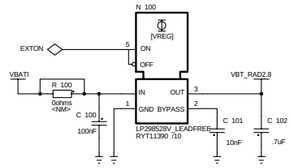

FLASH LED

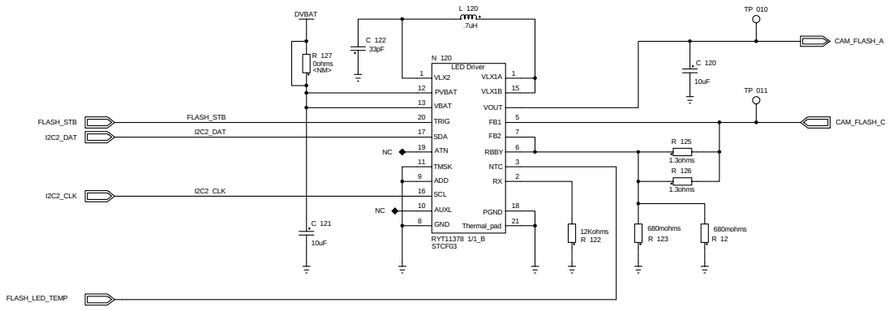

CAMERA

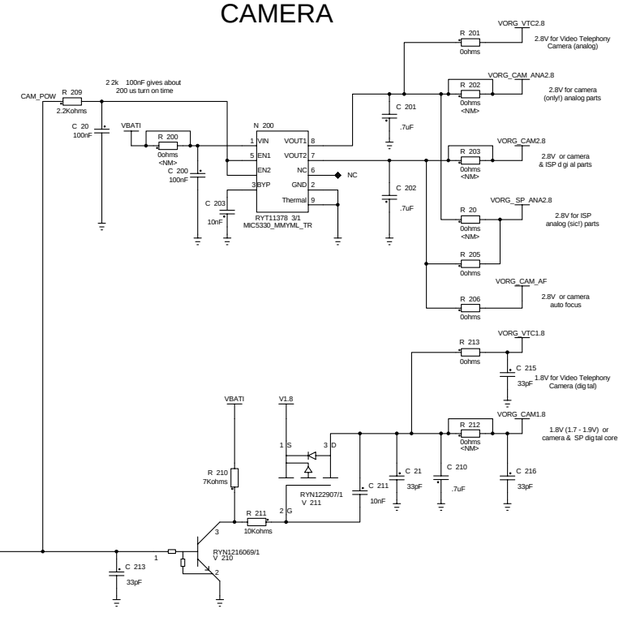

2.8V COMMON

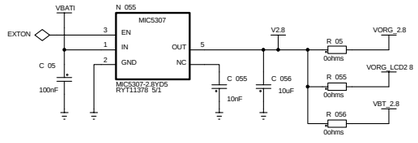

KRETSSCHEMA CIRCUIT DIAGRAM

Sony Ericsson	Upprätt av/av/av/